Paulmann

1, 2, 3, 4, 5, 6, 7, 10, 11, 12, 15, 16
17, 18, 19, 20, 22, 23, 24, 25, 26, 27
32,33,34

Info

www.paulmann.com

Paulmann Licht GmbH
Quezinger Feld 2
31832 Springe
Germany

www.paulmann.com

Art-Nr.:939.06 939.07
939.08 939.10
939.11 939.12

(+MA 326) PJI 06/17

CE

IP 67

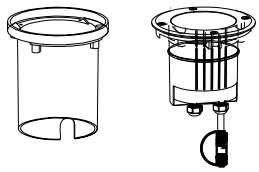

1x

incl.

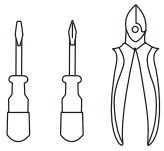

A

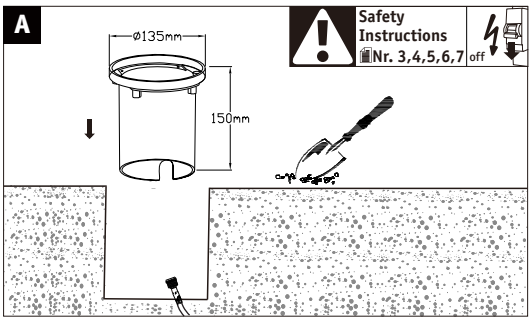

B

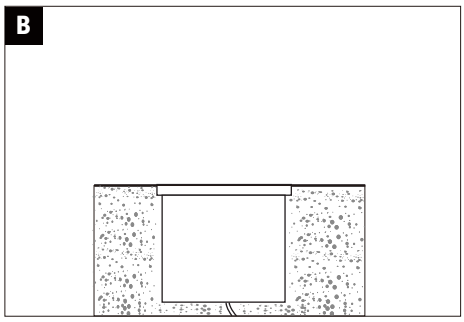

C

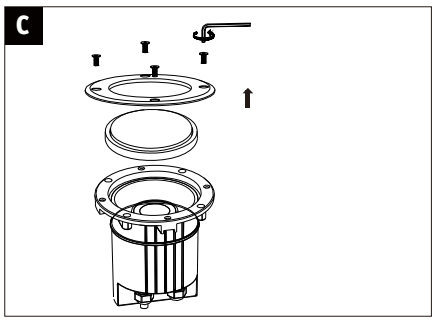

D

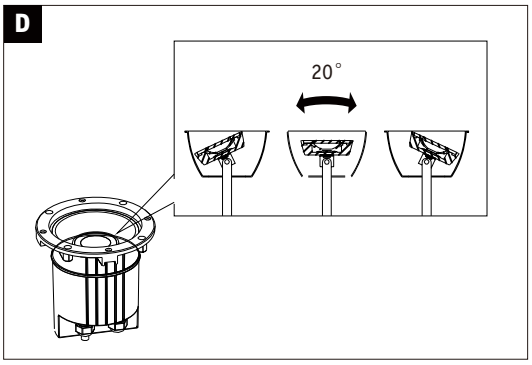

E

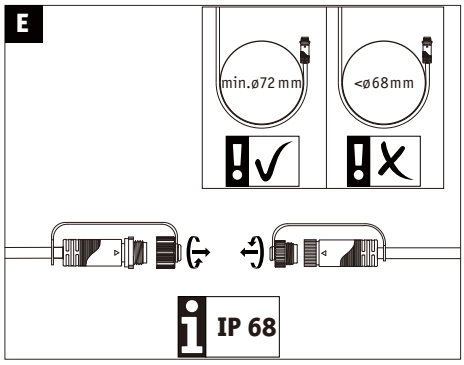

F

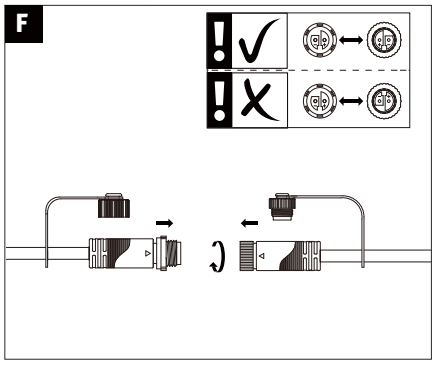

G

max. 50m
max. 150W

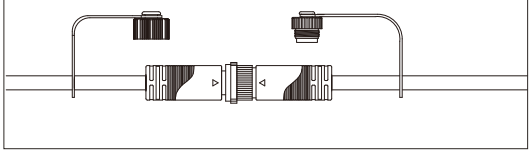

H

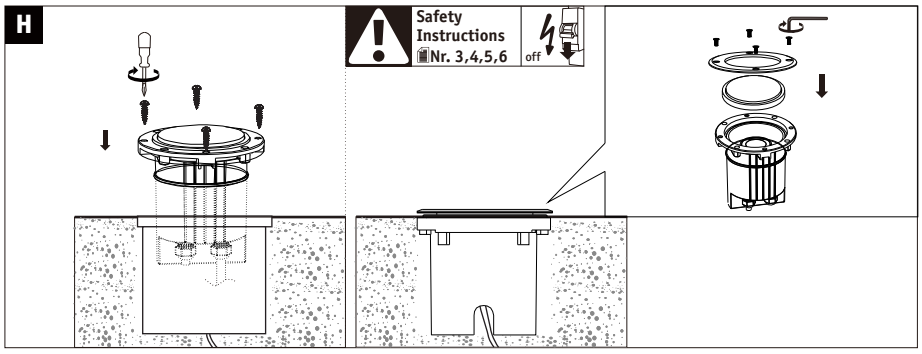

I

IP 68

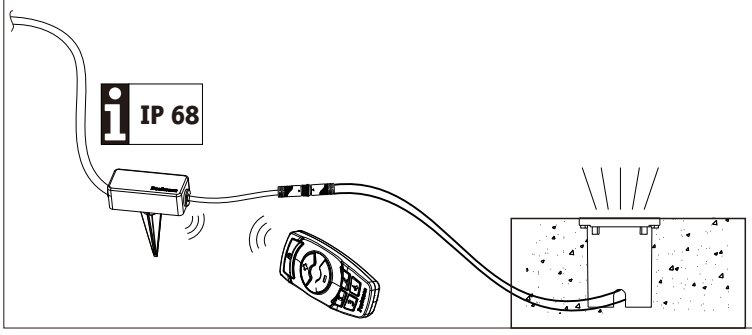

ON

not incl.

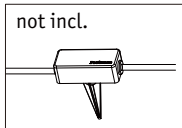

Control Box

Remote Control

Paulmann
Art.-Nr. 180.11
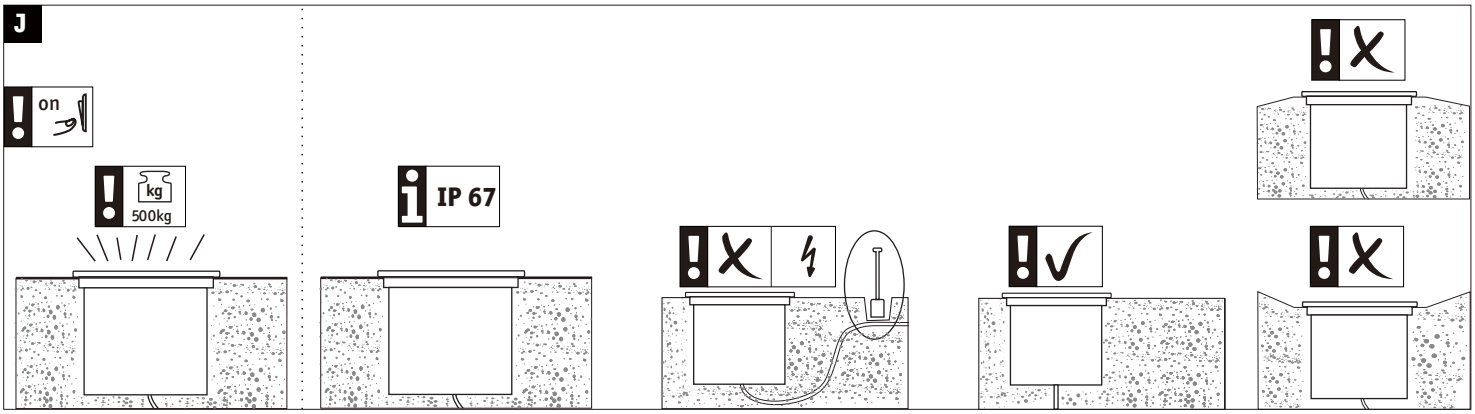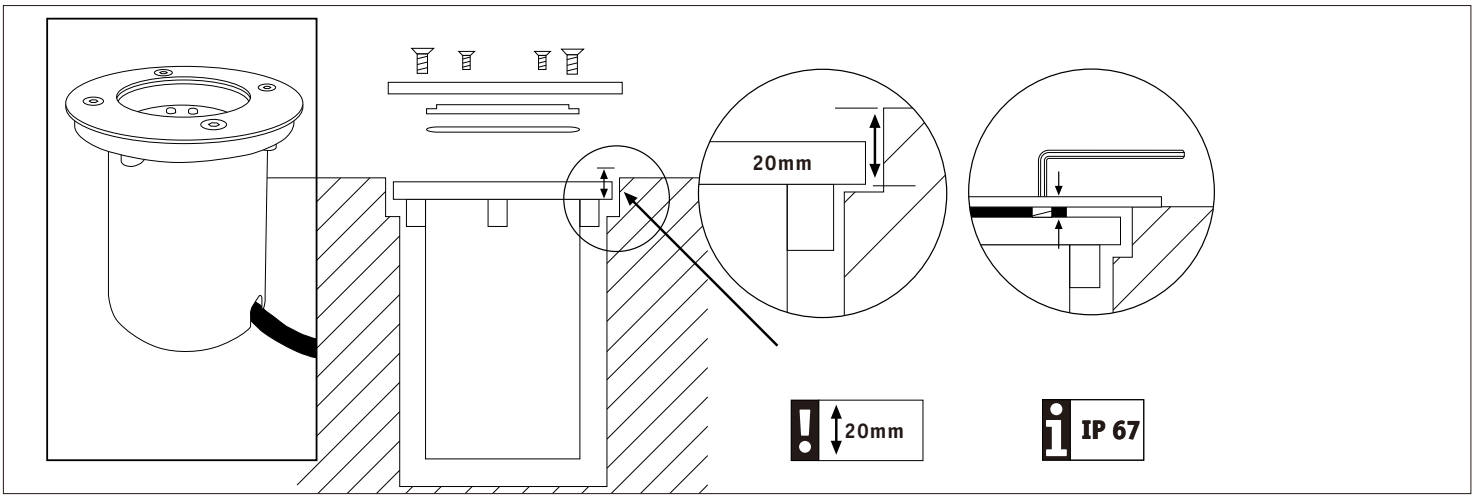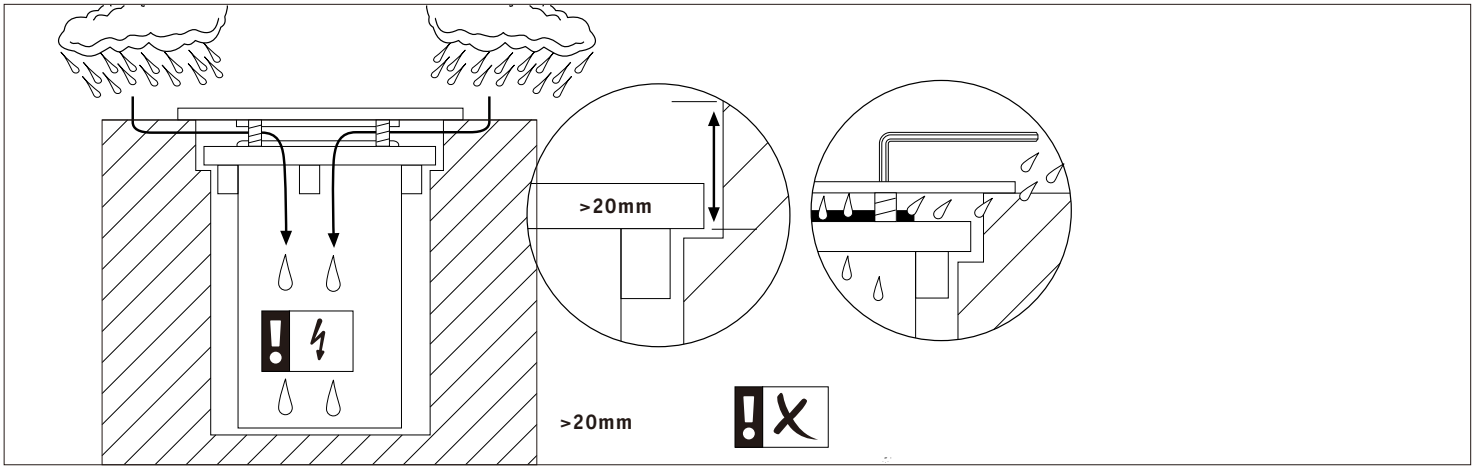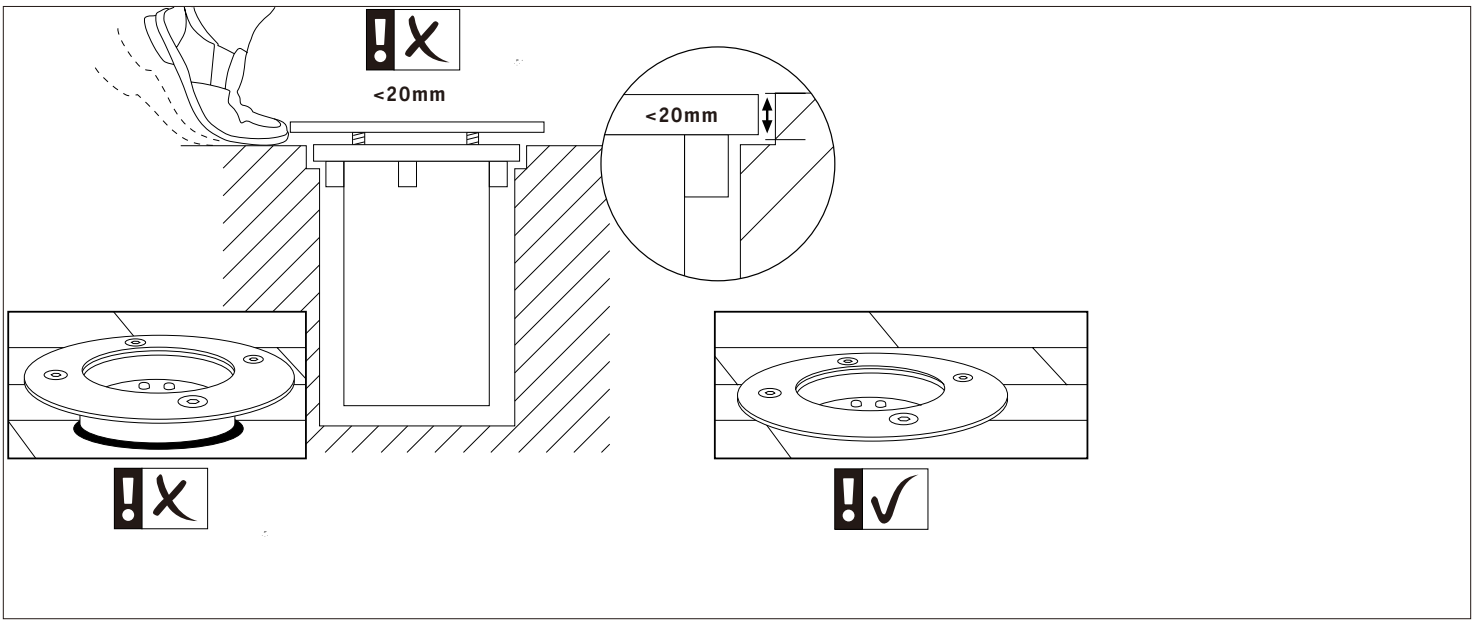
J