Paulmann

IP20

Info

www.paulmann.com

Paulmann Licht GmbH
Quezinger Feld 2
31832 Springe
Germany

www.paulmann.com

Art.-Nr.: 798.40

PEO 12/19

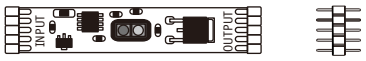

1x 1x

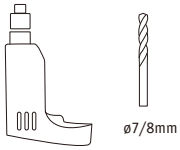

A

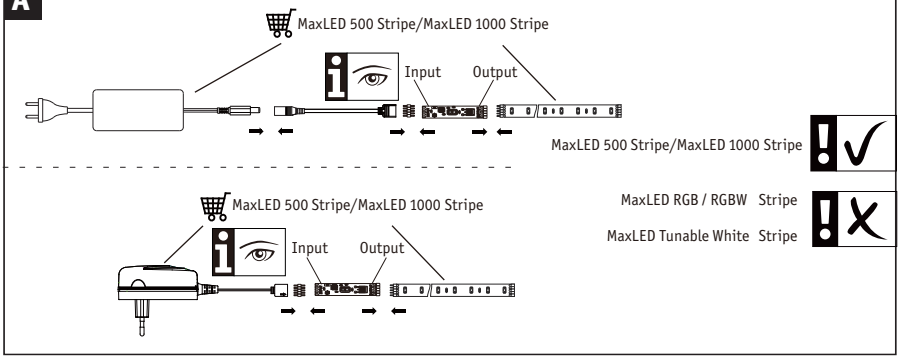

B

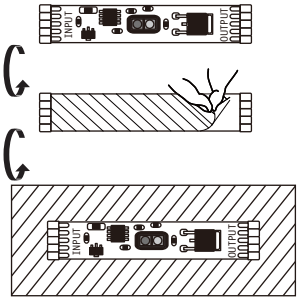

C

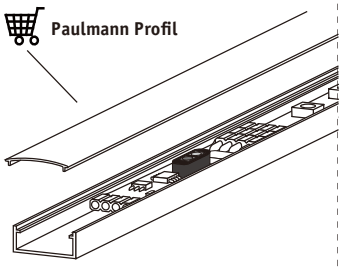

Profile	Touchless Sensor
	798.40
Base	X
Floor	7 mm/ center
Cup	X
Deep	8 mm/ center
Square	8 mm/ center
Tube	8 mm/ center
Duo	8 mm/ center
Corner	X
Socle	7 mm/ center
Step	8 mm/ center
Delta	8mm / ~ 7,5mm off diffusor edge

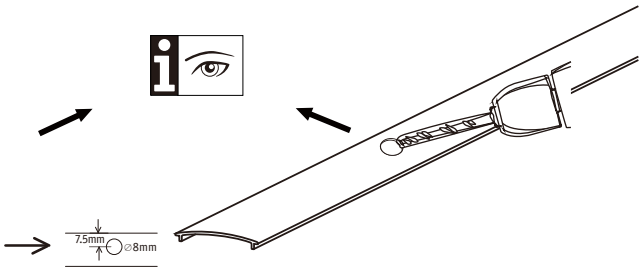

D

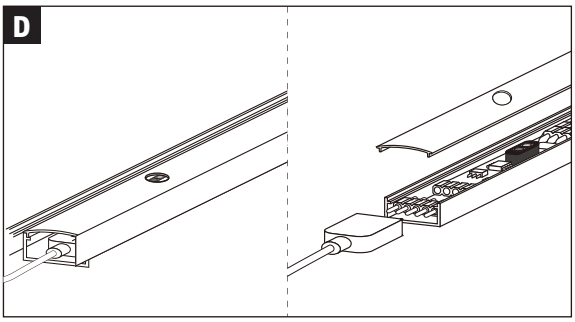

E

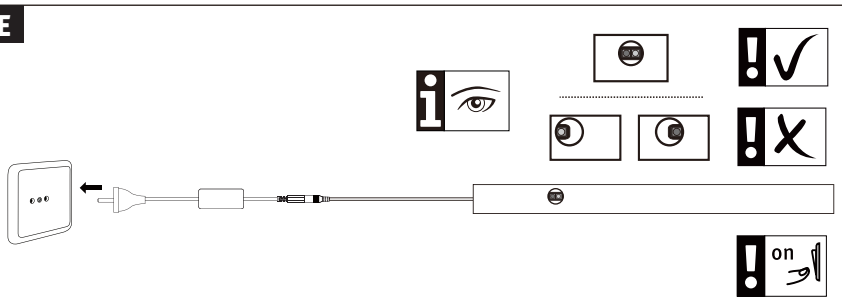
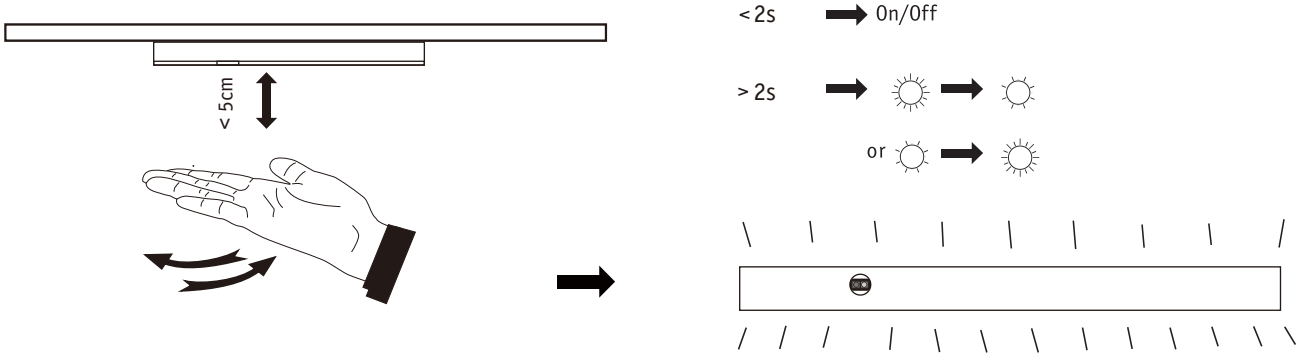
F